Board Description

This merger board seeks to combine the SCALES EPS board with the SCALES IMX8 Carrier Board. Both boards have undergone three revisions, this merger will combine the final revisions of both with each of them undergoing some more modifications based on seperate board reviews. Notable differences for each board compared to their individual counterparts are listed below.

Changes requested by True from Phytec were applied, based on the returned file 'imx8_carrier_v3_dsmith.pdf' recieved on 11/6/2025

SCALES_EPS

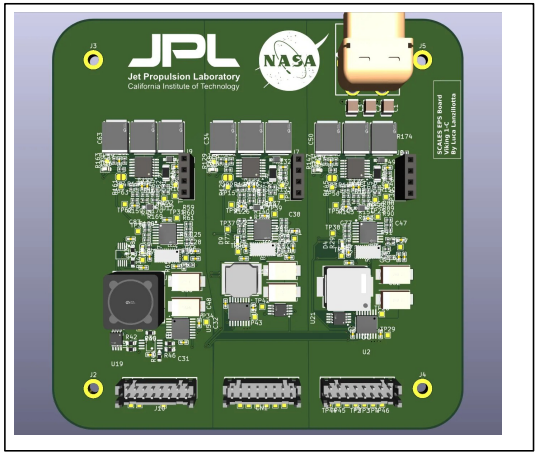

File: SCALES_EPS.kicad_sch

IMX8XQXP SCALES Mariner Carrier Board

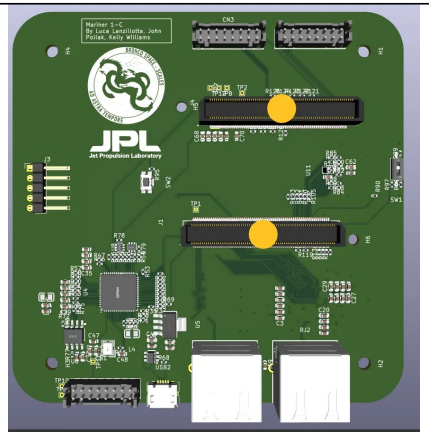

File: imx8qxp_carrier_board.kicad_sch

Block Diagram

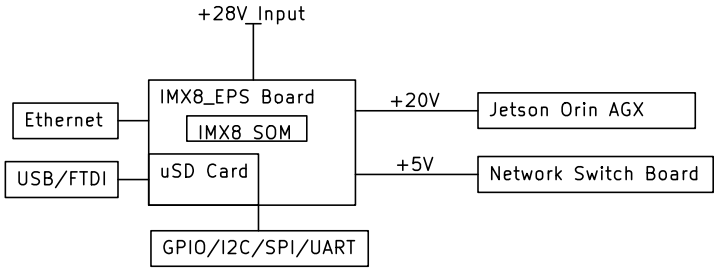

By Luca Lanzillotta & John Pollack
Bronco Space Lab

Sheet: /
File: imx8x_eps_leviathan.kicad_sch

Title: Leviathan 1-A

Size: A5	Date: 2025-10-29	**Rev: 1-A**
KiCad E.D.A. 9.0.3		Id: 1/16

EPS WD/Power On Conn. Ops

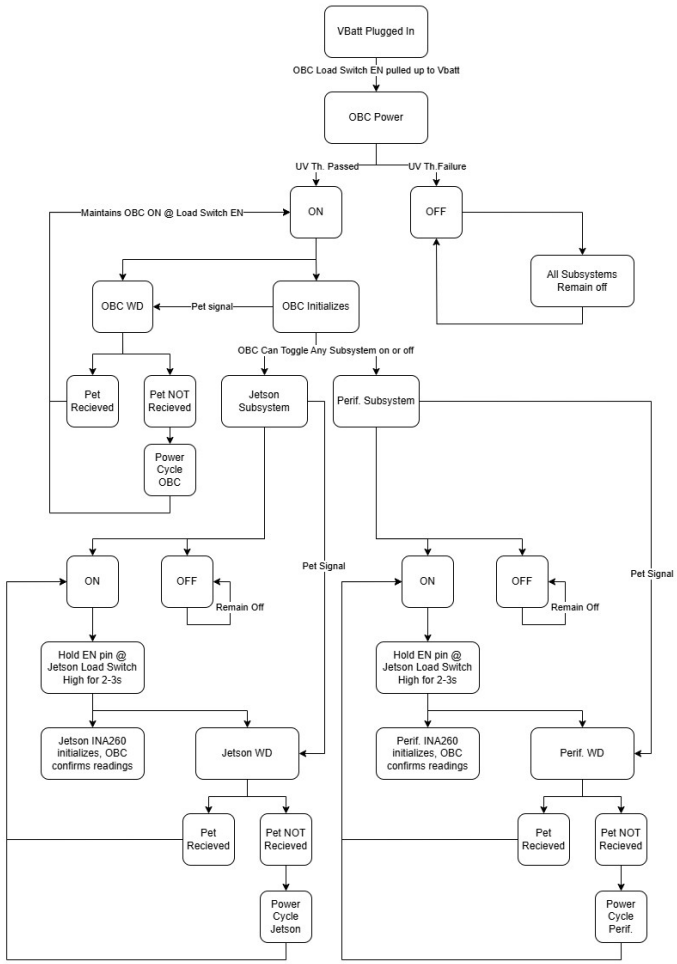

Power requirements per subsystem
OBC: 28v to 3.3v @ 2A
Jetson: 28v to 20v @ 4A
Perif: 28v to 5v @ 2A

Power on sequencing:
OBC powers when Vbatt is supplied. OBC controls operation of the Jetson as well as the Peripheral system via GPIO pins to the respective subsystem load switch.

Startup time for the Jetson on enable is ~10ms
Startup time for the Peripheral on enable is ~1ms
Startup time for the OBC on boot is ~1ms

Vbatt = [24.0, 28.8, 33.6] Due to Li-Ion battery charged and discharged states

Signal point ground from power board to rest of system

I2C Addresses Being Used:

INA260 OBC Subsystem: 0x41 (01000001)
INA260 Perif. Subsystem: 0x45 (01000101)
INA260 Jetson Subsystem: 0x40 (01000000)

MCP9808 OBC Subsystem: 0x19 (0001 1001)
MCP9808 Perif. Subsystem: 0x1A (0001 1010)
MCP9808 Jet. Subsystem: 0x1B (0001 1011)

EPS Block Diagram

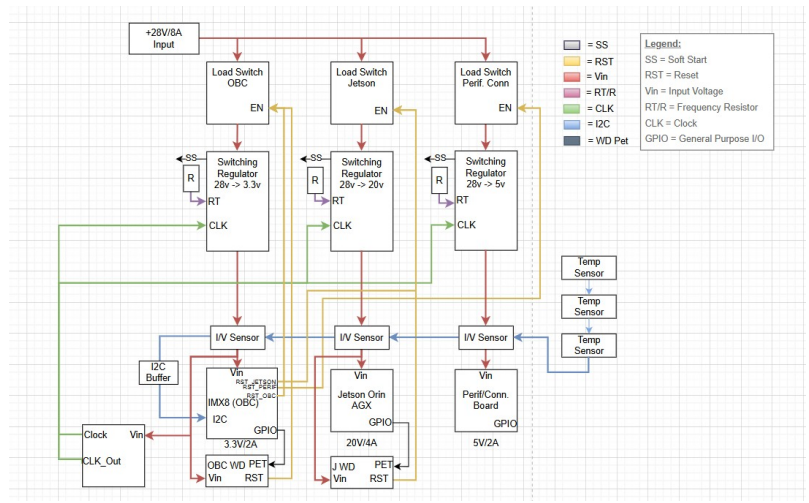

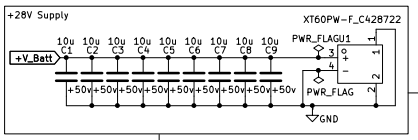

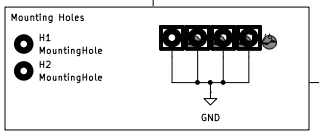

OBC_Subsystem

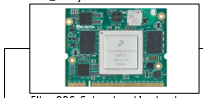

File: OBC_Subsystem.kicad_sch

Jetson_Subsystem

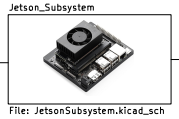

File: JetsonSubsystem.kicad_sch

Perif_Subsystem

File: Perif_Subsystem.kicad_sch

Temperature Sensors

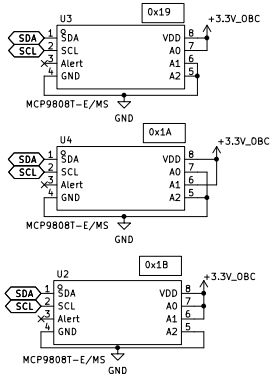

By Luca Lanzillotta & John Pollack
Bronco Space Lab
Sheet: /SCALES_EPS/
File: SCALES_EPS.kicad_sch

Title: Leviathan 1-A

Size: A3	Date: 2025-10-29	**Rev: 1-A**
KiCad E.D.A. 9.0.3		Id: 2/16

IMX8 SCALES Merger Board

Variant: Pre-Flight Testing Board

The IMX8 Scales Merger Board is a minimized version of the IMX8 Dev board combined with the SCALES EPS Board

Board Description:
Provided serial communications for end user: FTDI, UART, SPI, I2C
Power Input: From SCALES EPS Rev F (Hirose DF11 2x8 Connector)
Ethernet: 2, 10/100 Base-T RJ-45 Connectors
SPI/GPIO/I2C: Provided via Hirose DF11 2x8 Connector
SOM Connector: 2x140 proprietary Samtec Connector for IMX8QXP SOM

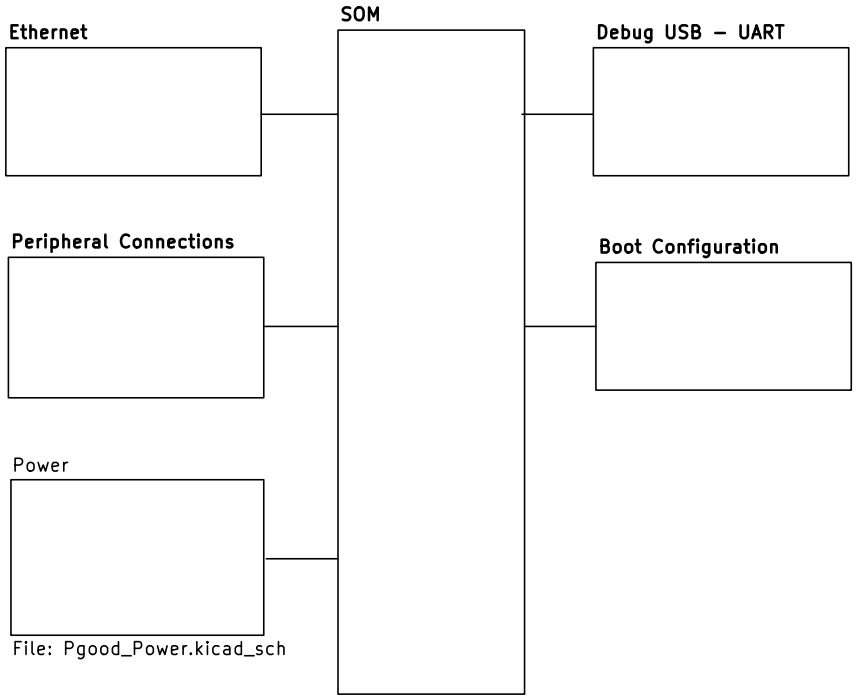

By Luca Lanzillotta & John Pollack
Bronco Space Lab

Sheet: /IMX8XQXP SCALES Mariner Carrier Board/
File: imx8qxp_carrier_board.kicad_sch

Title: Leviathan 1-A

Size: A5	Date: 2025-10-29	**Rev: 1-A**
KiCad E.D.A. 9.0.3		Id: 3/16

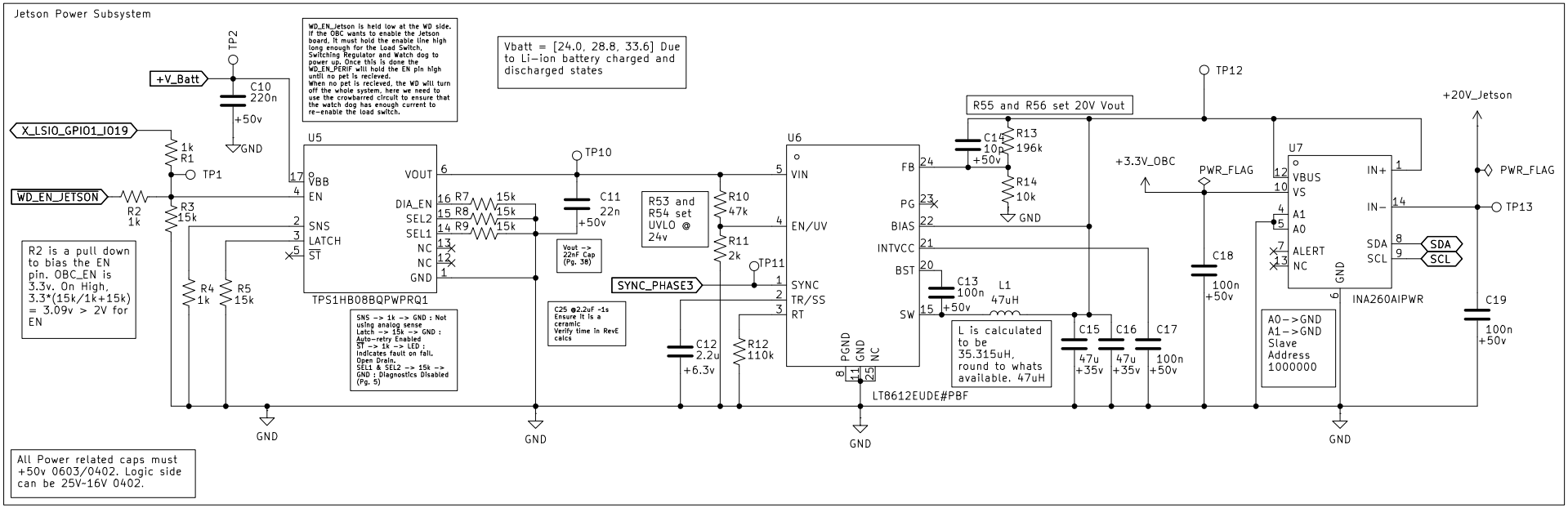

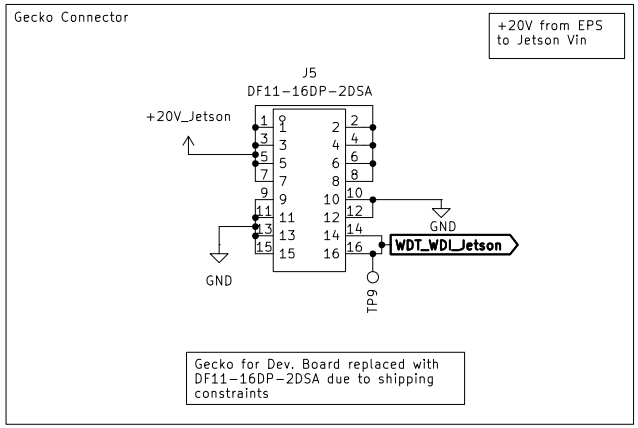

WD_Jetson

File: WD_Jetson.kicad_sch

To configure: (Pg.8)
SYNC (Tied to Clock Phase 2) DONE
RT (Set default frequency to 400khz) DONE
EN/UV threshold (-24v = UV, due to Li-ion discharge)(Pg. 15) DONE
PGND (Tie to GND) DONE
SW (Tie to inductor and setup the boost capacitor) DONE
BST (add 0.1uF bypass cap) DONE
INTVCC (add 0.1uF bypass cap) DONE
BIAS (If Vout is greater than 3.3v tie to vout)
FB (Set Vout via R1 and R2 using FB Setup Pg.12) DONE
TR/SS (Select a soft start time) -1s -> 2.16uF DONE
NC (Tie to ground) DONE

By Luca Lanzillotta & John Pollack
Bronco Space Lab

Sheet: /SCALES_EPS/Jetson_Subsystem/
File: JetsonSubsystem.kicad_sch

Title: Leviathan 1-A

Size: A4	Date: 2025-10-29	**Rev: 1-A**
KiCad E.D.A. 9.0.3		Id: 4/16

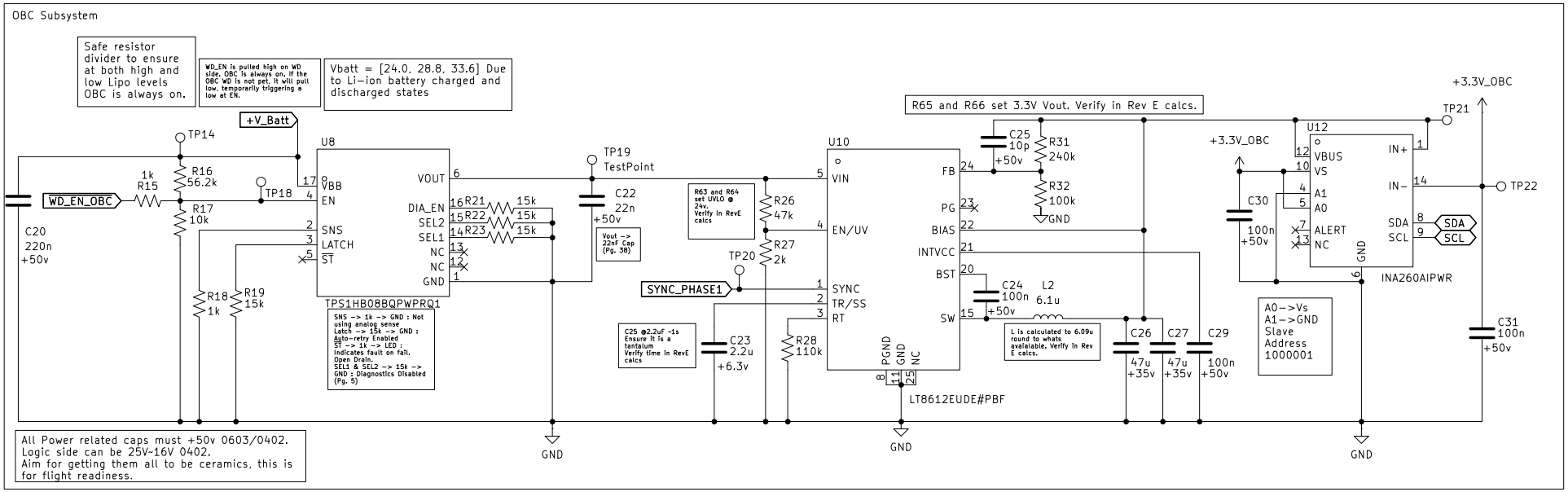

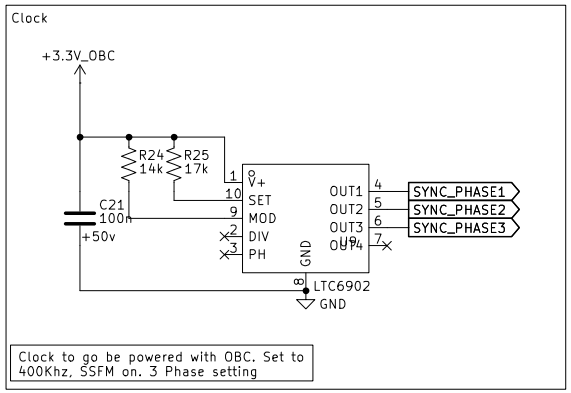

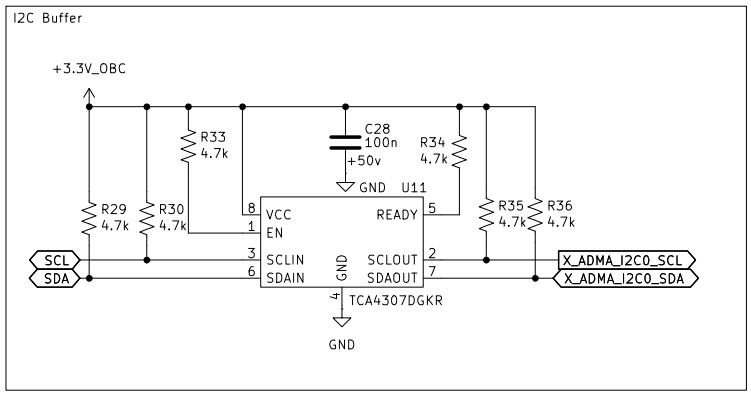

WD_OBC

To configure: (Pg.8)
SYNC (Tied to Clock Phase 2) DONE
RT (Set default frequency to 400khz) DONE
EN/UV threshold (~24v = UV, due to Li-ion discharge)(Pg. 15) DONE
PGND (Tie to GND) DONE
SW (Tie to inductor and setup the boost capacitor) DONE
BST (add 0.1uF bypass cap) DONE
INTVCC (add 0.1uF bypass cap) DONE
BIAS (If Vout is greater than 3.3v tie to vout)
FB (Set Vout via R1 and R2 using FB Setup Pg.12) DONE
TR/SS (Select a soft start time) ~1s -> 2.16uF DONE
NC (Tie to ground) DONE

File: WD_OBC.kicad_sch

By Luca Lanzillotta & John Pollack
Bronco Space Lab

Sheet: /SCALES_EPS/OBC_Subsystem/
File: OBC_Subsystem.kicad_sch

Title: Leviathan 1-A

Size: A4	Date: 2025-10-29	**Rev: 1-A**
KiCad E.D.A. 9.0.3		Id: 5/16

Peripheral Subsystem

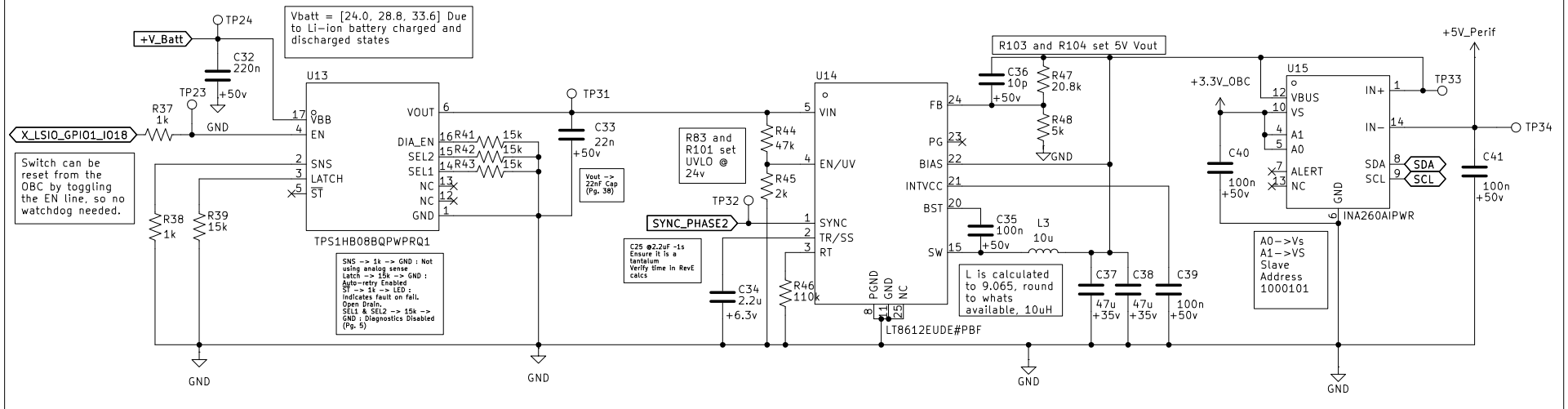

Gecko Connector

Gecko for Dev. Board replaced with DF11-16DP-2DSA due to shipping constraints

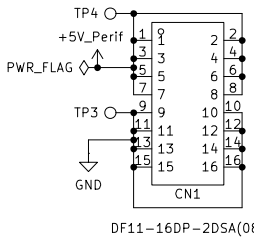

Gecko 16 pin Male connector

To configure: (Pg.8)
SYNC (Tied to Clock Phase 2) DONE
RT (Set default frequency to 400khz) DONE
EN/UV threshold (~24v = UV, due to Li-ion discharge)(Pg. 15) DONE
PGND (Tie to GND) DONE
SW (Tie to inductor and setup the boost capacitor) DONE
BST (add 0.1uF bypass cap) DONE
INTVCC (add 0.1uF bypass cap) DONE
BIAS (If Vout is greater than 3.3v tie to vout)
FB (Set Vout via R1 and R2 using FB Setup Pg.12) DONE
TR/SS (Select a soft start time) ~1s -> 2.16uF DONE
NC (Tie to ground) DONE

By Luca Lanzillotta & John Pollack
Bronco Space Lab

Sheet: /SCALES_EPS/Perif_Subsystem/
File: Perif_Subsystem.kicad_sch

Title: Leviathan 1-A

Size: A4	Date: 2025-10-29	**Rev: 1-A**
KiCad E.D.A. 9.0.3		Id: 6/16

External Watch-Dog Timer

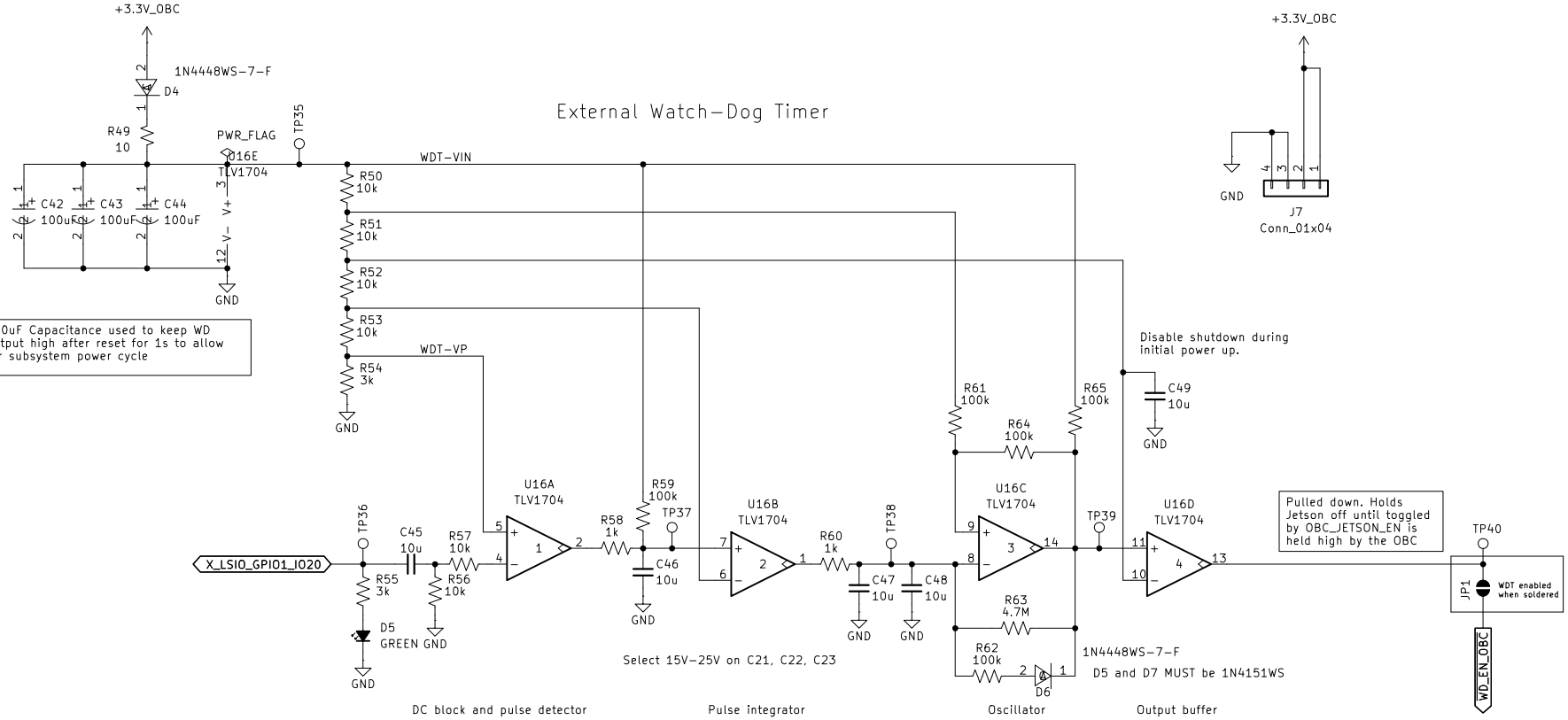

By Luca Lanzillotta & John Pollack

Bronco Space Lab

Sheet: /SCALES_EPS/OBC_Subsystem/WD_OBC/

File: WD_OBC.kicad_sch

Title: Leviathan 1-A

Size: A4	Date: 2025-10-29	**Rev: 1-A**
KiCad E.D.A. 9.0.3		Id: 7/16

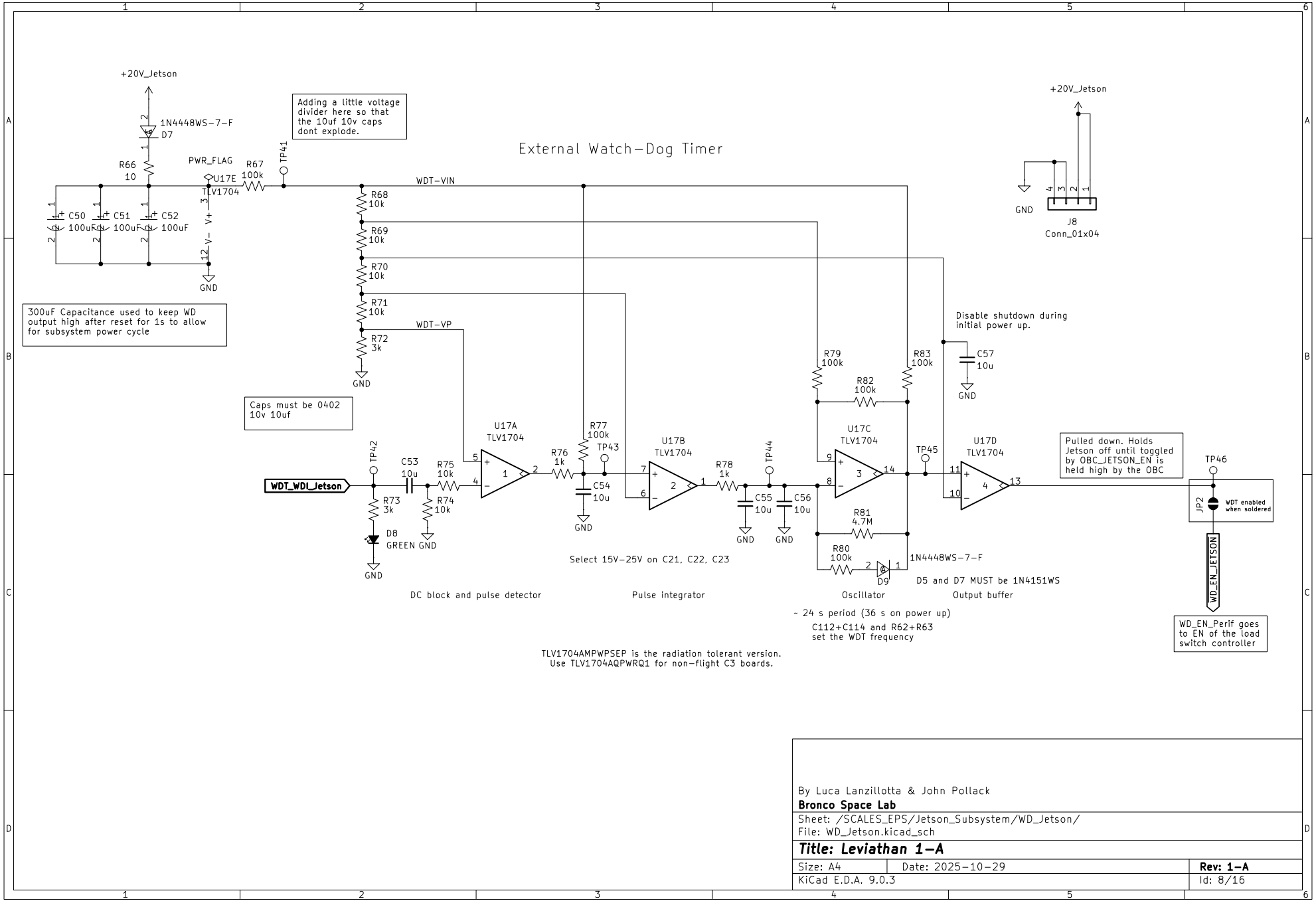

By Luca Lanzillotta & John Pollack

Bronco Space Lab

Sheet: /SCALES_EPS/Jetson_Subsystem/WD_Jetson/

File: WD_Jetson.kicad_sch

Title: Leviathan 1-A

Size: A4	Date: 2025-10-29	**Rev: 1-A**
KiCad E.D.A. 9.0.3		Id: 8/16

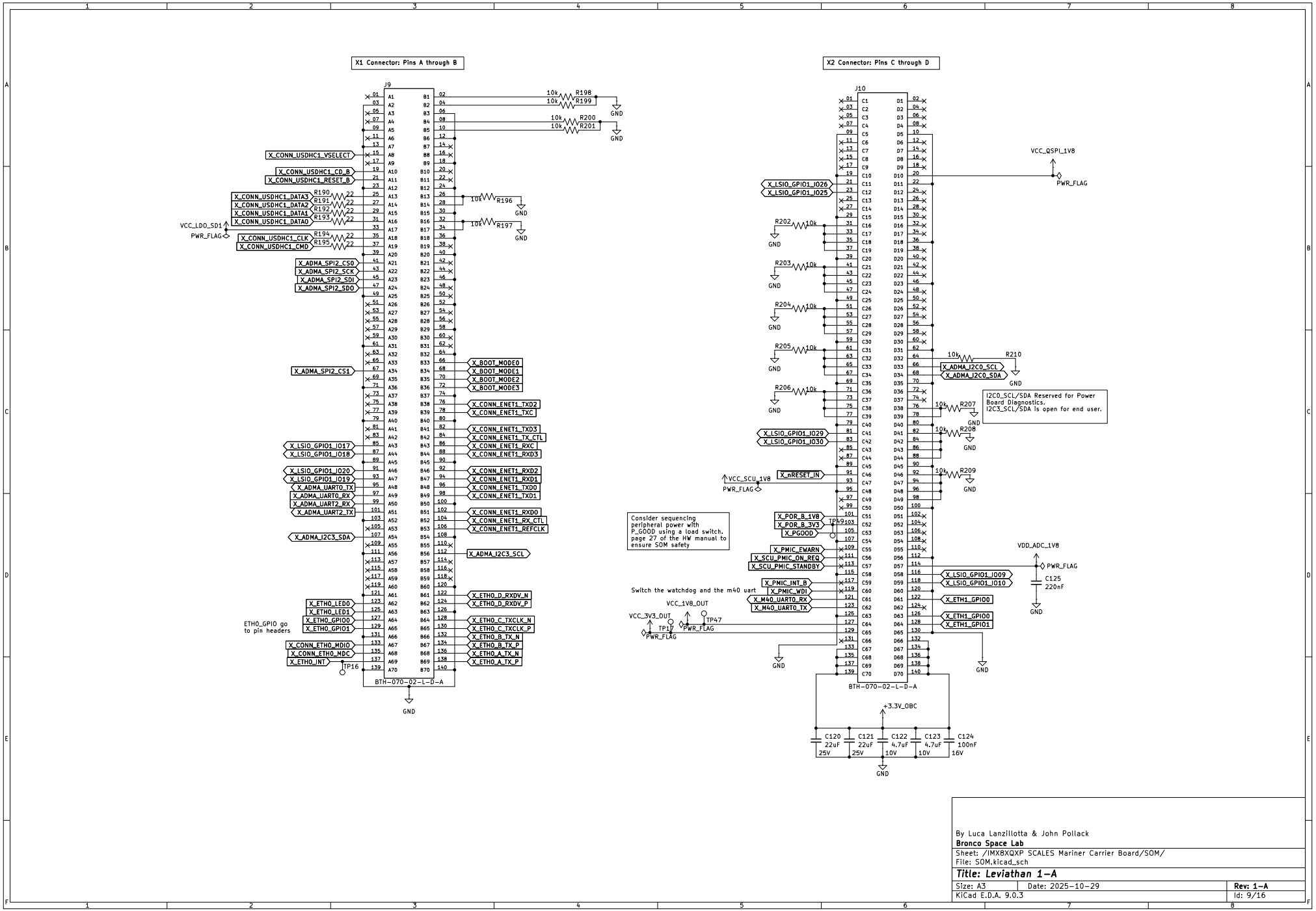

By Luca Lanzillotta & John Pollack

Bronco Space Lab

Sheet: /IMXBXQXP SCALES Mariner Carrier Board/SOM/

File: SOM.kicad_sch

Title: Leviathan 1-A

Size: A3	Date: 2025-10-29	**Rev: 1-A**
KiCad E.D.A. 9.0.3		Id: 9/16

Description:
The SDCard/Wifi Mux(s) have been removed to allow for Default SDCard boot configuration and Utilization. If it is desired to use eMMC, then there must be a switch to toggle between boot modes, this is BOOTMODE[3:0] bits 0010 to eMMCand 0011 to SDcard respectively. Due to removal of all other boot configurations, we only need to switch the last bit using the provided switch we will include.

SD Card Power Enable Switch

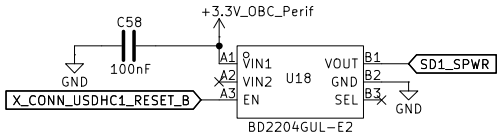

Bootmode Toggler

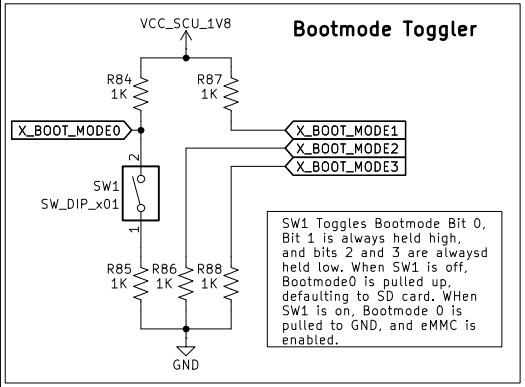

SW1 Toggles Bootmode Bit 0, Bit 1 is always held high, and bits 2 and 3 are alwaysd held low. When SW1 is off, Bootmode0 is pulled up, defaulting to SD card. WHen SW1 is on, Bootmode 0 is pulled to GND, and eMMC is enabled.

uSD Card Connector

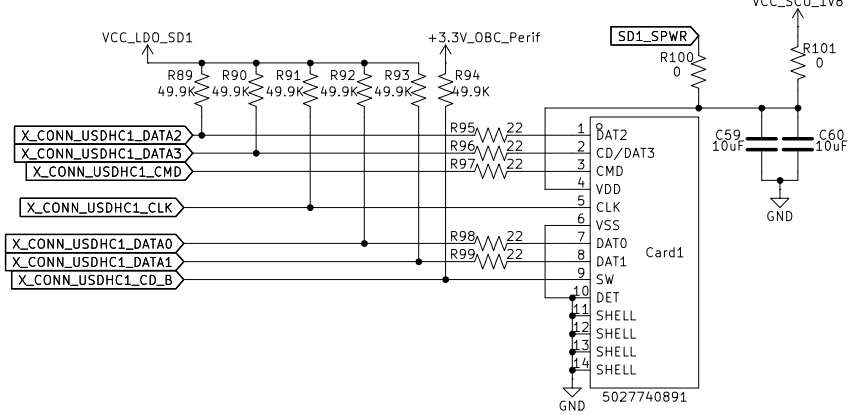

By Luca Lanzillotta & John Pollack

Bronco Space Lab

Sheet: /IMX8XQXP SCALES Mariner Carrier Board/Boot Configuration/
File: bootConfig.kicad_sch

Title: Leviathan 1-A

Size: A4	Date: 2025-10-29	**Rev: 1-A**
KiCad E.D.A. 9.0.3		Id: 10/16

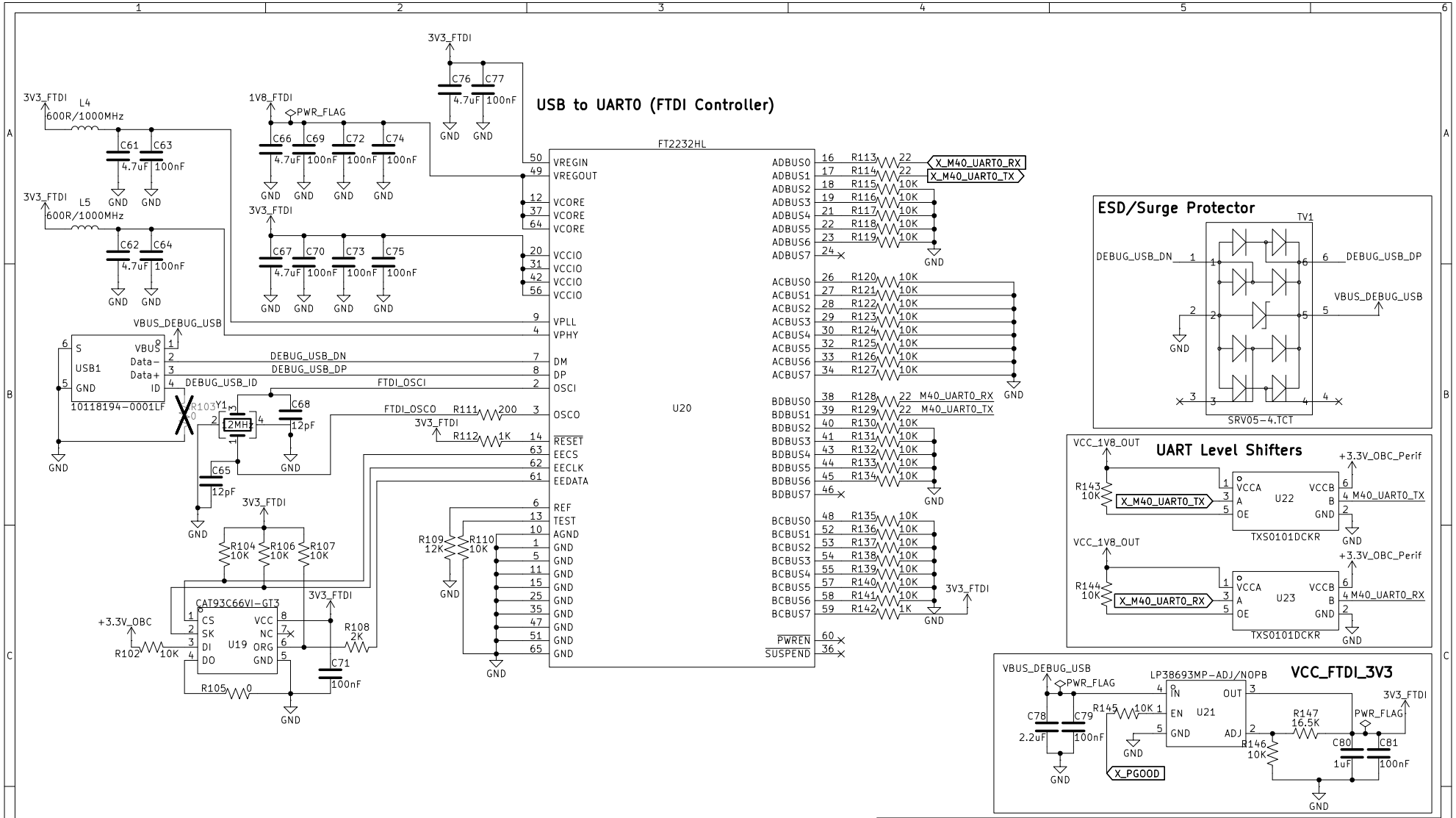

Description:
UART0 on the SOM is reserved for UART-FTDI usage. The default BSP configures the SOM to use UART0 for debugging, this allows the user to be able to use UART to send and recieve commands and telemetry with the SOM. The chip below facilitates UART to FTDI translation so that the end user can utilize a serial port on a seperate machine to interface directly. This design and chip are provided by Phytec.

By Luca Lanzillotta & John Pollack

Bronco Space Lab

Sheet: /IMX8XQXP SCALES Mariner Carrier Board/Debug USB - UART/

File: debug.kicad_sch

Title: Leviathan 1-A

Size: A4	Date: 2025-10-29	**Rev: 1-A**
KiCad E.D.A. 9.0.3		Id: 11/16

10/100/1000 Ethernet

Description: Ethernet configuration and bootstrap modes are configured on the SOM.
This is all ported from the IMX8X dev board. There are two available Ethernet configurations for the SOM, one is preconfigured on the SOM with an onboard RGMII translator, and the second one is included in this carrier board.

Anything going to the SOM is single ended. 50ohm. Impedance Controlled.

U25
DP83867CRRGZR

Pin	Signal	Net
17	MDIO	X_CONN_ETH0_MDIO
16	MDC	X_CONN_ETH0_MDC
25	TX_D3	X_CONN_ENET1_TXD3
26	TX_D2	X_CONN_ENET1_TXD2
27	TX_D1	X_CONN_ENET1_TXD1
28	TX_D0	X_CONN_ENET1_TXD0
37	TX_CTRL	X_CONN_ENET1_TX_CTL
29	GTX_CLK	X_CONN_ENET1_TXC
33	RX_D0	X_CONN_ENET1_RXD0
34	RX_D1	X_CONN_ENET1_RXD1
35	RX_D2	X_CONN_ENET1_RXD2
36	RX_D3	X_CONN_ENET1_RXD3
38	RX_CTRL	X_CONN_ENET1_RX_CTL
32	RX_CLK	X_CONN_ENET1_RXC
44	INT/PWDN	X_ETH1_GPIO0
23	JTAG_TDI	
22	JTAG_TMS	
21	JTAG_TDO	
20	JTAG_CLK	
15	X_I	ETH1_PHY_XI
14	X_O	ETH1_PHY_XO
43	RESET_N	X_POR_B_1V8
12	RBIAS	
1	TD_P_A	ETH1_A_TX_P
2	TD_M_A	ETH1_A_TX_N
4	TD_P_B	ETH1_B_TX_P
5	TD_M_B	ETH1_B_TX_N
7	TD_P_C	ETH1_C_TXCLK_P
8	TD_M_C	ETH1_C_TXCLK_N
10	TD_P_D	ETH1_D_RXDV_P
11	TD_M_D	ETH1_D_RXDV_N
47	LED_0	LED0_LINK
46	LED_1	
45	LED_2	LED2_ACT
39	GPIO_0	X_ETH1_GPIO0
40	GPIO_1	X_ETH1_GPIO1
18	CLK_OUT	X_CONN_ENET1_REFCLK
13	VDDA1P8	VCC_ENET_2V5
48	VDDA1P8	
9	VDDA2P5	
3	VDDA2P5	
6	VDD1P0	
24	VDD1P0	
31	VDD1P0	
42	VDD1P0	
19	VDDIO	
30	VDDIO	
41	VDDIO	
49	GND	GND

R169 22, R170 22, R171 22, R172 22, R173 22, R174 0

R167 2K

C88 18pF 50V, C89 18pF 50V, Y3 25MHz, R168 1M, R175 100, R189 15K, R176 1K, R177 10K

+1.8V_OBC_Perif Dependent on Pgood

3v3 dependent on Pgood. From Load switch

ETH1 RX Pull-up

R179 10K, R181 2.49K, R180 2.49K, R182 2.49K

PHY address = 3

Output from 3v3 som to 1v8 switching regulator

ETH1 GPIO/RX Pull-up

GPIO_0 MODE 3 + GPIO_1 MODE 0 (1.5 ns RX Clock to Data Skew)

R183 5.76K, R184 2.49K, R186 5.76K, R187 2.49K

MODE 3= Autoneg. enable

Output from 3v3 som to 1v8 switching regulator

Q1 IRLML6401, Q2 BSS138, R185 10K, R188 10K, PWR_FLAG

C91 1uF 10V, C94 100nF 16V, C97 1uF 10V, C100 100nF 16V, C103 10nF 50V, C106 10uF 16V

C90 1uF 10V, C93 100nF 16V, C96 1uF 10V, C99 100nF 16V, C102 1uF 10V, C105 100nF 16V, C107 1uF 10V, C109 100nF 16V, C112 10nF 50V, C115 10uF 16V

C92 100nF 16V, C95 1uF 10V, C98 100nF 16V, C101 1uF 10V, C104 100nF 16V, C108 1uF 10V, C110 10nF 50V, C111 10uF 16V

C113 1uF 10V, C114 100nF 16V, C116 1uF 10V, C117 100nF 16V, C118 10nF 50V, C119 10uF 16V

VDD_ETH_1V0

These Bulk Capacitors Need Not Be Directly Next to the Pins

Trigger Buffer

R149 10K, R152 5.76K, R150 2.49K, R153 2.49K

U28 74LVC2G07GW

LED0_LINK, LED2_ACT, ETH1_LED0, ETH1_LED2

Ethernet Ports

Ethernet 0

Ethernet 1

C87 10nF, PWR_FLAG, GNDPWR

VDD_ETH_2V5_SUPPLY

+3.3V_OBC_Perif

C82 100nF, C83 100nF, R148 10K, U26 MCP1824T-ADJE/OT, R155 2.5k, R157 13K, R40 50, C86 100nF, VCC_ENET_2V5

Output from 3v3 som to 1v8 switching regulator

VDD_ETH_1V0_SUPPLY

C84 100nF, R151 10K, U27 TLV71310PDQNR, C85 100nF, PWR_FLAG

By Luca Lanzillotta & John Pollack
Bronco Space Lab
Sheet: /IMX8XQXP SCALES Mariner Carrier Board/Ethernet/
File: ethernet.kicad_sch

Title: Leviathan 1-A

Size: A4	Date: 2025-10-29	**Rev: 1-A**
KiCad E.D.A. 9.0.3		Id: 12/16

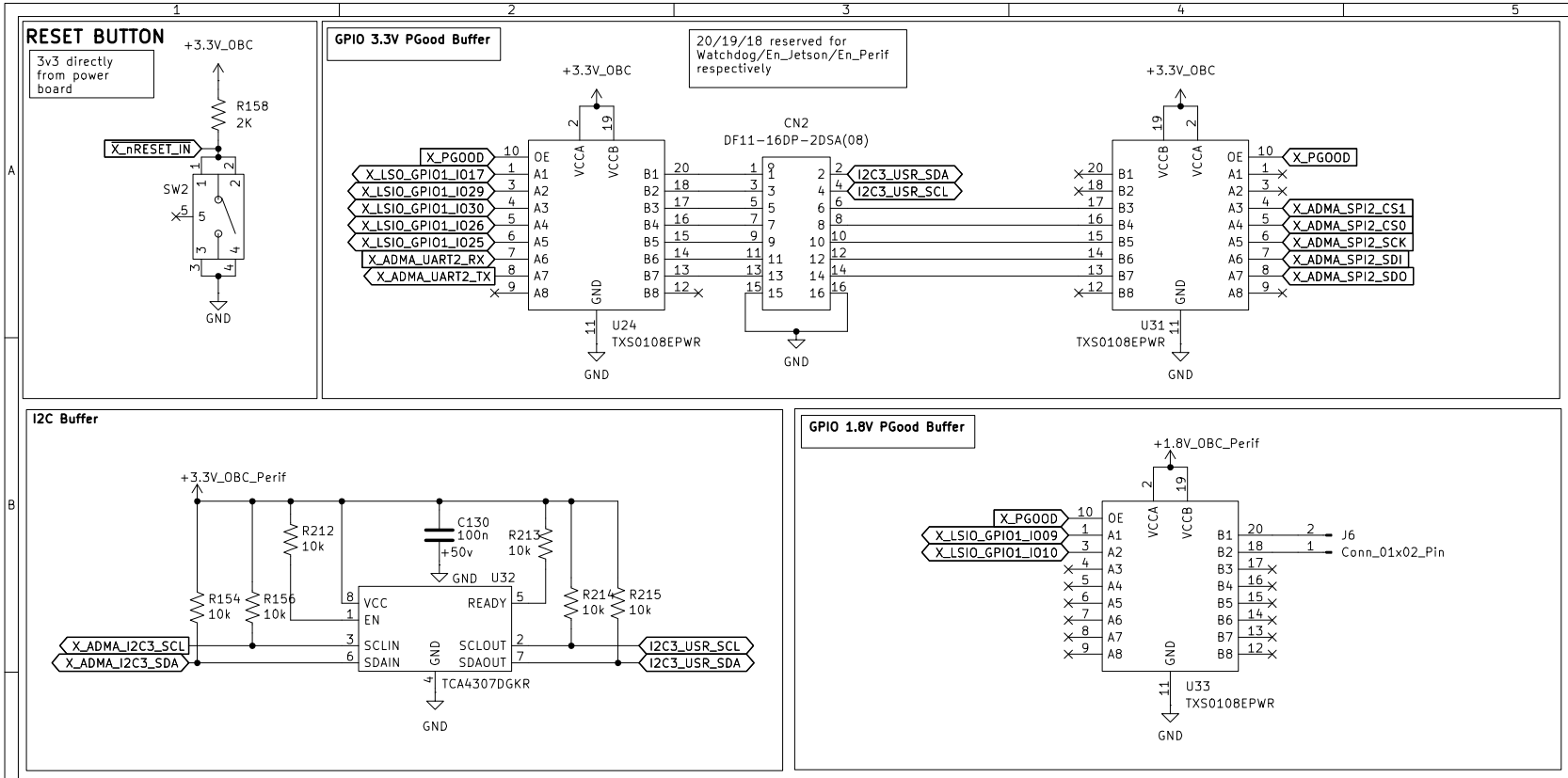

By Luca Lanzillotta & John Pollack

Bronco Space Lab

Sheet: /IMX8XQXP SCALES Mariner Carrier Board/Peripheral Connections/

File: periphCon.kicad_sch

Title: Leviathan 1-A

Size: A4	Date: 2025-10-29	**Rev: 1-A**
KiCad E.D.A. 9.0.3		Id: 13/16

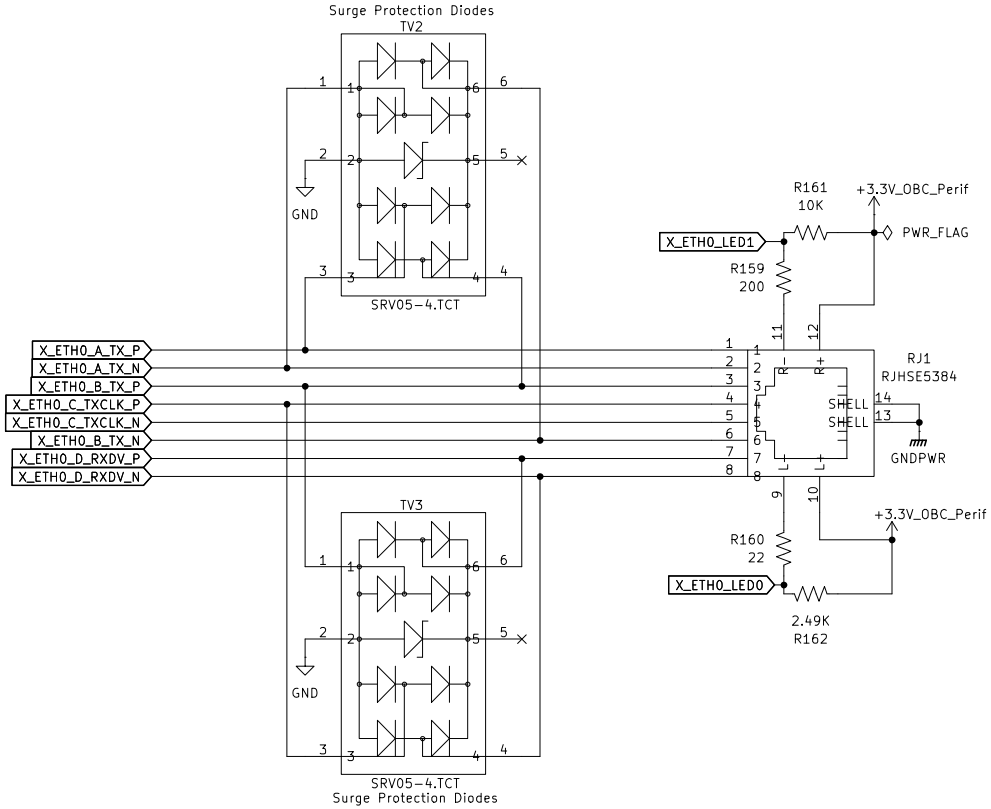

By Luca Lanzillotta & John Pollack

Bronco Space Lab

Sheet: /IMX8XQXP SCALES Mariner Carrier Board/Ethernet/Ethernet 0/

File: ethernet0.kicad_sch

Title: Leviathan 1-A

Size: A4	Date: 2025-10-29	**Rev: 1-A**
KiCad E.D.A. 9.0.3		Id: 14/16

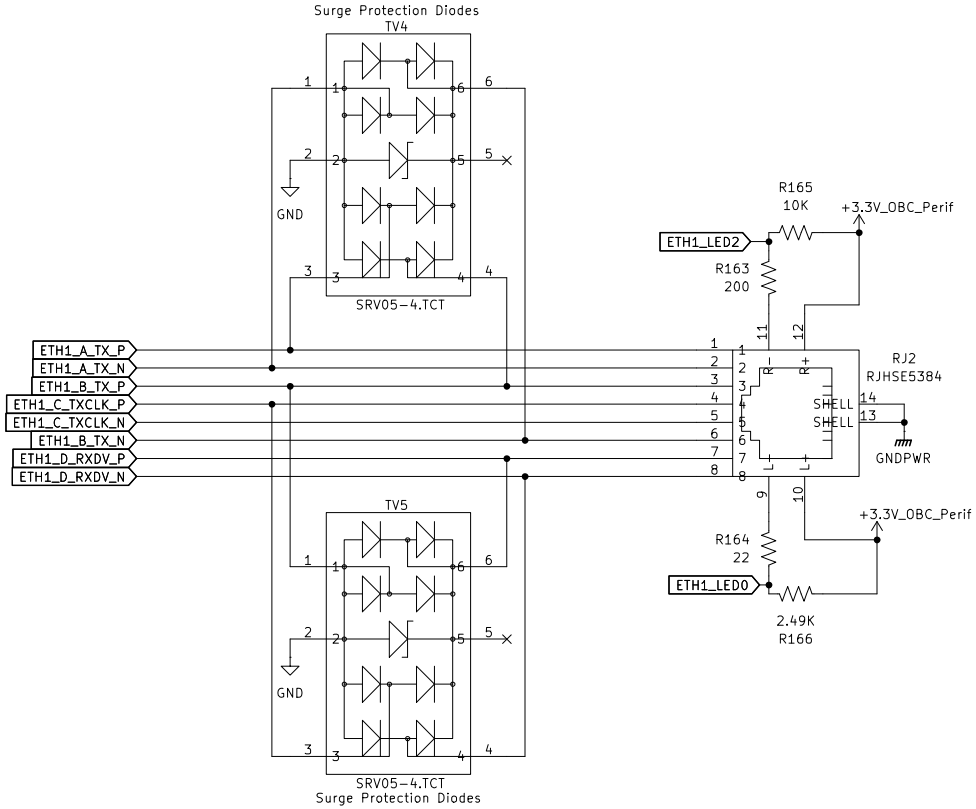

By Luca Lanzillotta & John Pollack

Bronco Space Lab

Sheet: /IMX8XQXP SCALES Mariner Carrier Board/Ethernet/Ethernet 1/

File: ethernet1.kicad_sch

Title: Leviathan 1-A

Size: A4	Date: 2025-10-29	**Rev: 1-A**
KiCad E.D.A. 9.0.3		Id: 15/16

3V3_OBC to VCC_3V3 Load Switch

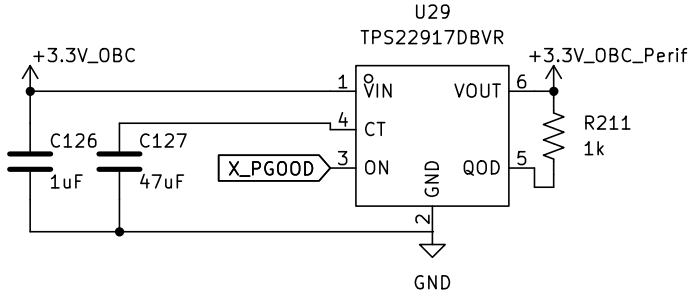

Using PGood to power sequence 3V3 Dependent peripheral devices on the carrier board.

3V3_OBC to VCC_1V8 Switching Regulator

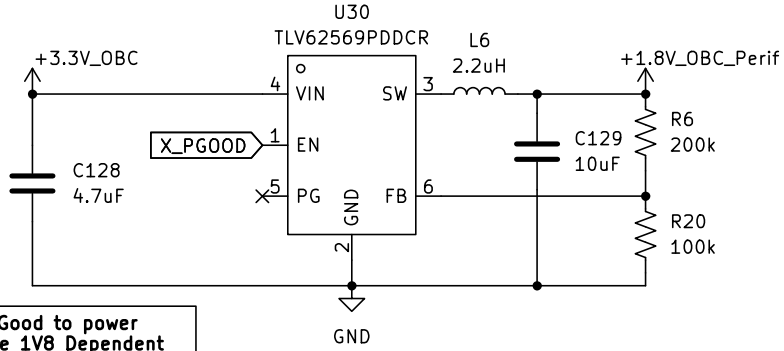

Using PGood to power sequence 1V8 Dependent peripheral devices on the carrier board.

By Luca Lanzillotta & John Pollack
Bronco Space Lab

Sheet: /IMX8XQXP SCALES Mariner Carrier Board/Power/
File: Pgood_Power.kicad_sch

Title: Leviathan 1-A

Size: A5	Date: 2025-10-29	**Rev: 1-A**
KiCad E.D.A. 9.0.3		Id: 16/16